CITY OF WATERLOO, WISCONSIN

2020 STREET AND UTILITY CONSTRUCTION

UTILITIES

GAS
WE ENERGIES
PHONE (414) 751-7273
CONTACT: ABIGAIL TANNER
EMAIL: abigail.tanner@we-energies.com
EMAIL: we-utility-relocations@we-energies.com

MUNICIPAL WATER
WATERLOO UTILITIES
575 COMMERCIAL AVE.
WATERLOO, WI 53594
PHONE 920-478-2260
CONTACT: BARRY SORENSON
EMAIL bsorenson@wppienergy.org

DEPT OF PUBLIC WORKS AND SEWER UTILITY
211 HENDRIX ST
WATERLOO, WI 53594
PHONE 920-478-9797
CONTACT: CHAD YERGES
Email dpw@waterloo.wi.us

TELEPHONE
FRONTIER COMMUNICATIONS
100 COMMUNICATIONS DRIVE
SUN PRAIRIE, WI 53590
PHONE 608-837-1605
CONTACT: DANA GILLETT
EMAIL: dana.gillett@ftr.com

CABLE TELEVISION
CHARTER COMMUNICATIONS
2701 DANIELS STREET
MADISON, WI 53718
PHONE 920-349-3202 X72523
CONTACT: RON FRASE
EMAIL: RON.FRASE@CHARTER.COM

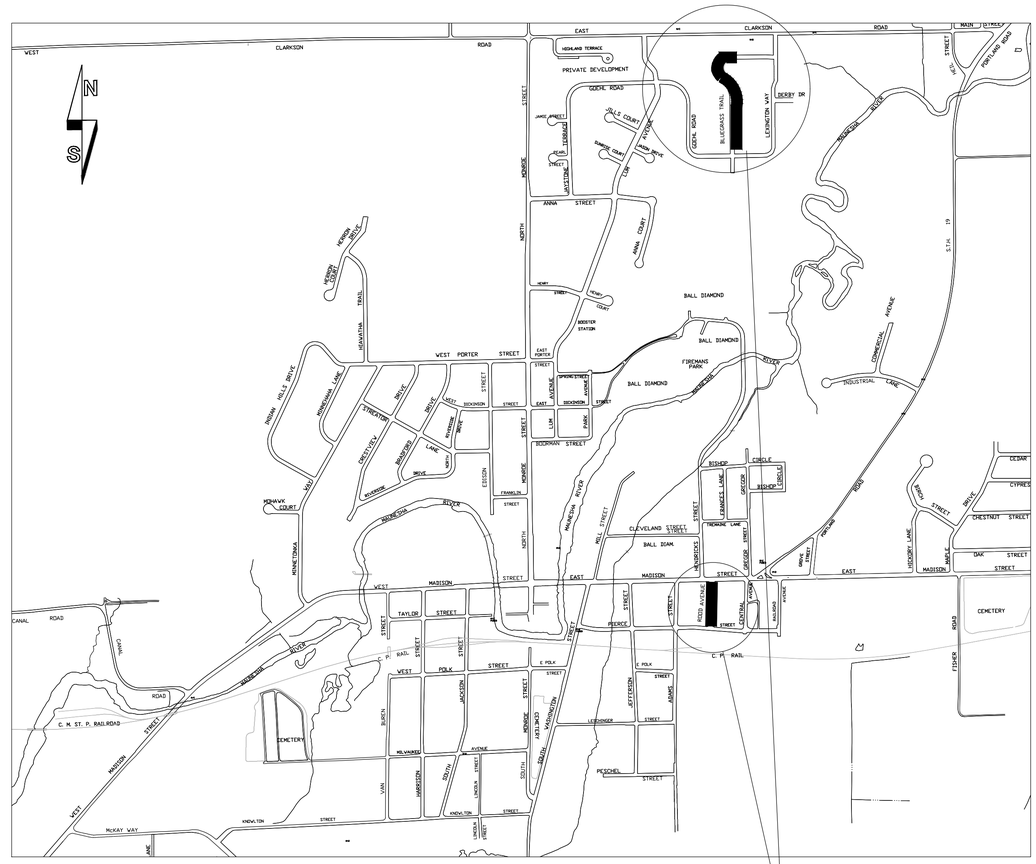

SHEET INDEX

2 TREYBURN FARMS 1ST ADDITION PHASE 3
BLUEGRASS TRAIL EXTENSION PLAN AND PROFILE
4 ROOD AVENUE RECONSTRUCTION PLAN AND PROFILE
6 SEWER AND WATER DETAILS
7 STREET DETAILS AND TYPICAL CROSS-SECTIONS
8 EROSION AND SEDIMENT CONTROL DETAILS

PRELIMINARY PLAN
FOR REVIEW ONLY
NOT FOR CONSTRUCTION
11.25.19 JKB

PROJECT LOCATIONS

TO OBTAIN LOCATION OF
PARTICIPANTS' UNDERGROUND
FACILITIES BEFORE YOU
DIG IN WISCONSIN

CALL DIGGERS HOTLINE

811

TOLL FREE 1-800-242-8511

EMERGENCY # ONLY 1-877-500-9592

TDD (FOR HEARING IMPAIRED) 1-800-542-2289

WWW.DiggersHotline.com

WISCONSIN STATUTE 182.0175 (1974)
REQUIRES MINIMUM OF 3 WORK DAYS
NOTICE BEFORE YOU EXCAVATE.

WISCONSIN
JACKIE
KOHN - BORN
E-43991
BEAVER DAM
WI
PROFESSIONAL ENGINEER

KUNKEL engineering group
1115 South Main Street
West Bend, WI 53094
(920)356-9447
Fax (920)356-9454

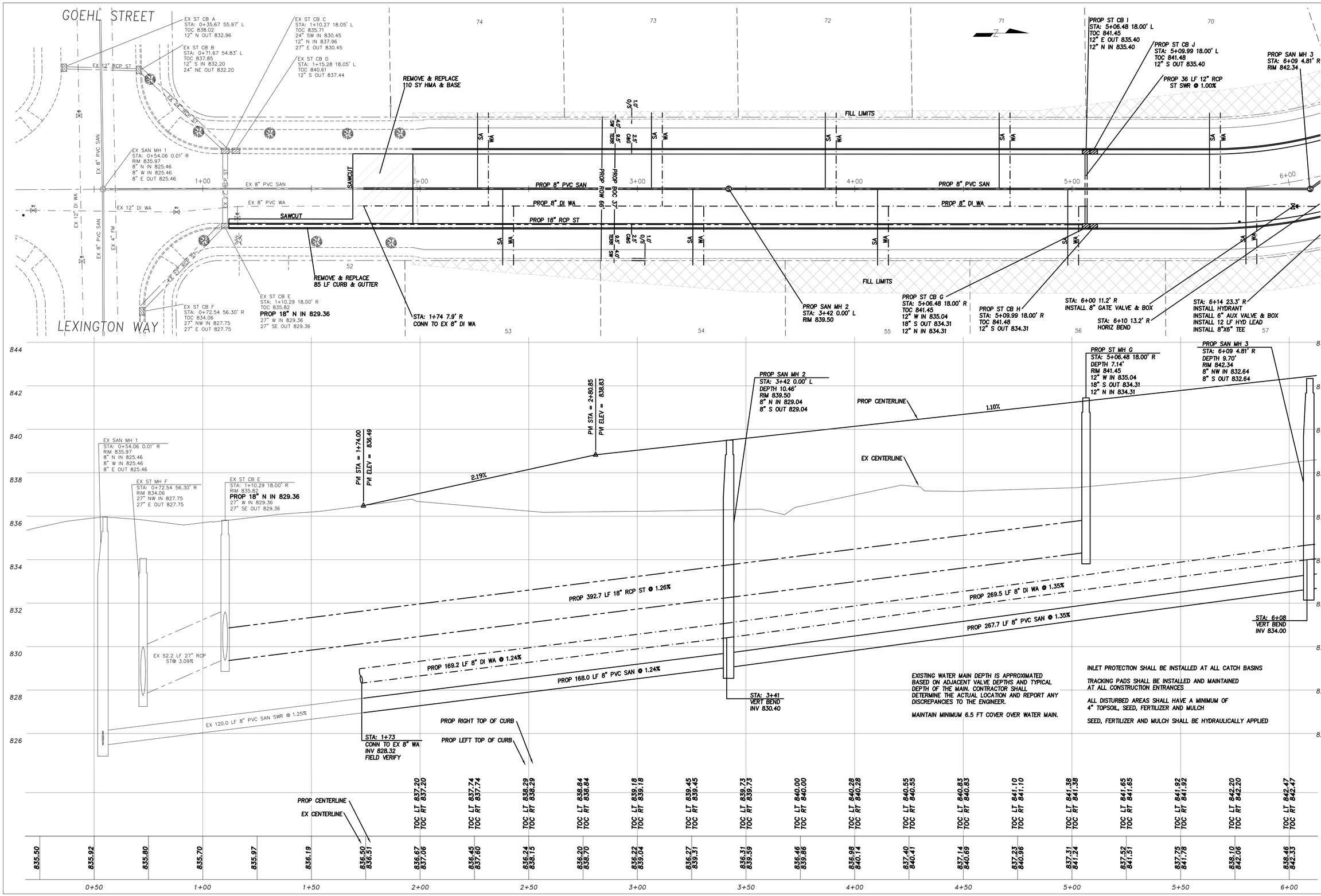

Waterloo
Find Your Path Here

KUNKEL engineering group
107 Parallel Street
Beaver Dam, WI 53916
(920)356-9447
Fax (920)356-9454

	INITIALS	DATE
1st REVISION BY:	#####	#####
2nd REVISION BY:	#####	#####
ASBUILT BY:	#####	#####

	INITIALS	DATE
DESIGNED BY:	JKB	10/2019
DRAWN BY:	JKB	10/2019
CHECKED BY:	MJL	10/2019
APPROVED BY:	JKB	11/2019

NOTE:
1. CERTAIN UTILITIES AND/OR STRUCTURES BOTH ABOVE AND BELOW GROUND HAVE BEEN LOCATED ON THE PLANS. THESE LOCATIONS SHALL NOT BE TAKEN AS CONCLUSIVE. VERIFICATION TO THE SATISFACTION OF THE CONTRACTOR OF THE EXACT LOCATION AND CONDITION OF ALL UTILITIES AND/OR STRUCTURES, WHETHER SHOWN ON THE PLANS OR NOT, SHALL BE ASSUMED TO BE A PART OF THE CONTRACT.
2. THE CONTRACTOR SHALL BE RESPONSIBLE FOR THE PROTECTION OF ALL UTILITIES AND STRUCTURES. THE CONTRACTOR SHALL NOTIFY ALL UTILITIES AND STRUCTURES OWNERS AND THEIR AUTHORIZED REPRESENTATIVES, AND THEIR AUTHORIZED TO BE REMOVED BY ANY NON-UTILITY PERSONNEL FOR ANY PURPOSE WITHOUT FIRST CONSULTING WITH THE CITY SURVEYOR OR THE PROJECT ENGINEER OR KUNKEL ENGINEERING GROUP.

City of Waterloo, WI
2020 Street and Utility Construction
Treyburn Farms 1st Addition
Phase 3 Bluegrass Trail Extension
Sta: 0+50 to Sta: 6+00

SCALE AS SHOWN:
0 20'

ENGINEER PROJ NO:
KU19.1053.00

OWNER PROJ NO:
00-00

SHEET NUMBER:
2 of 8

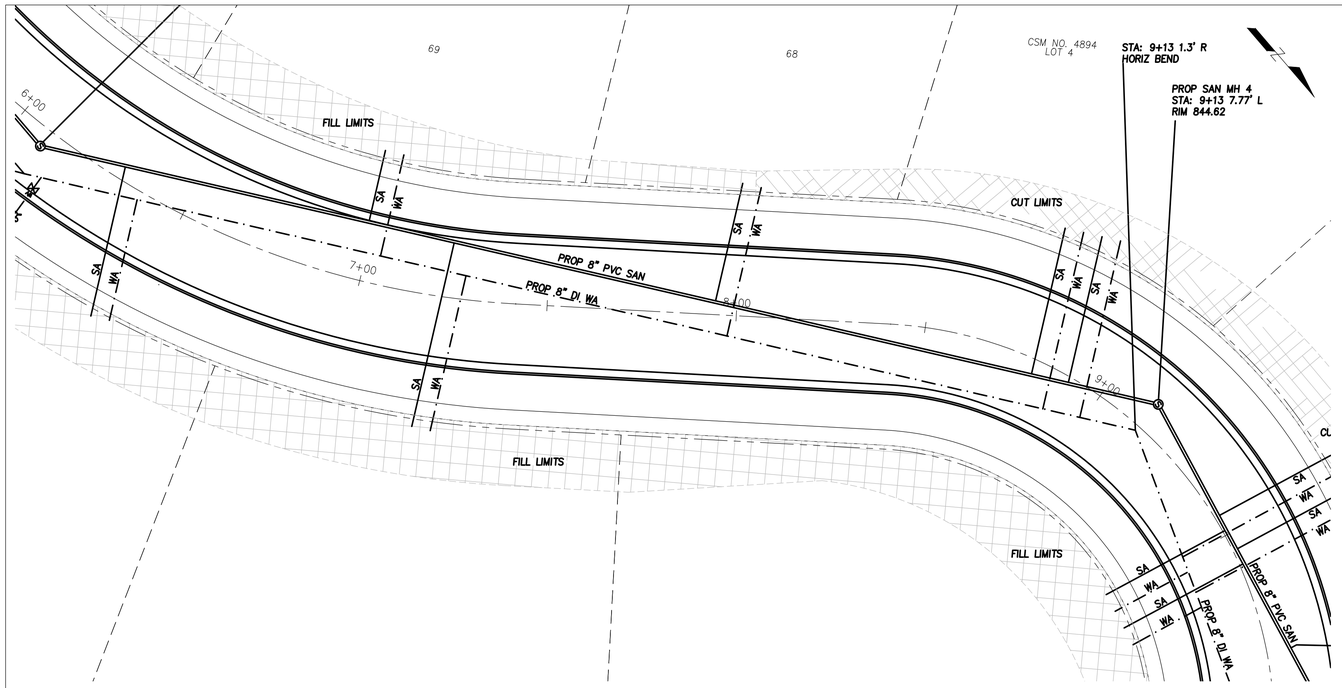

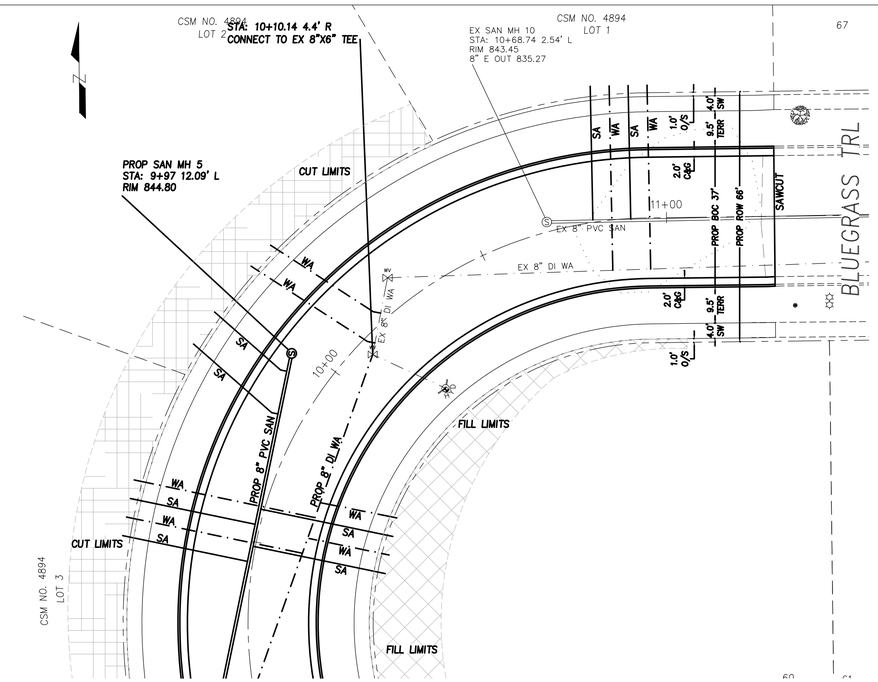

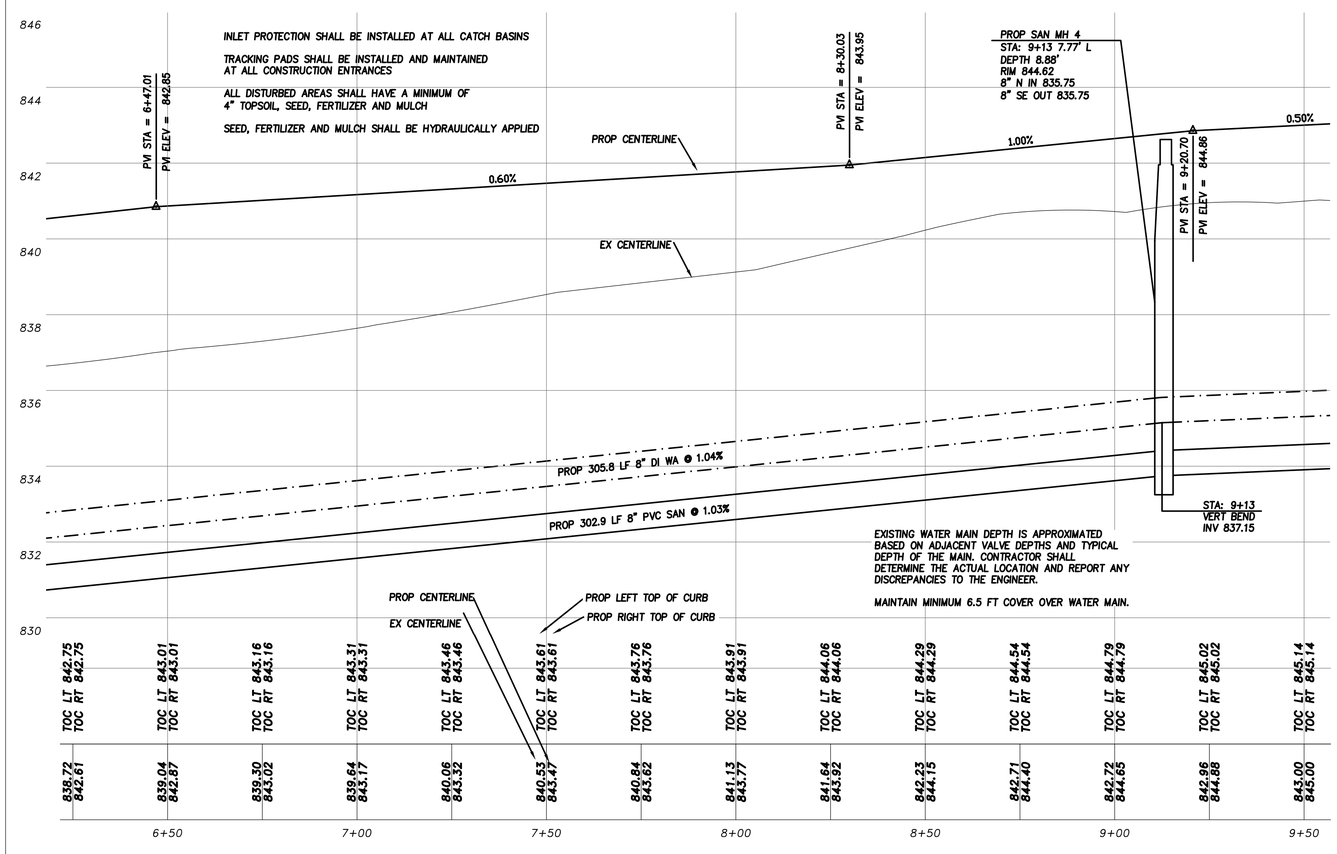

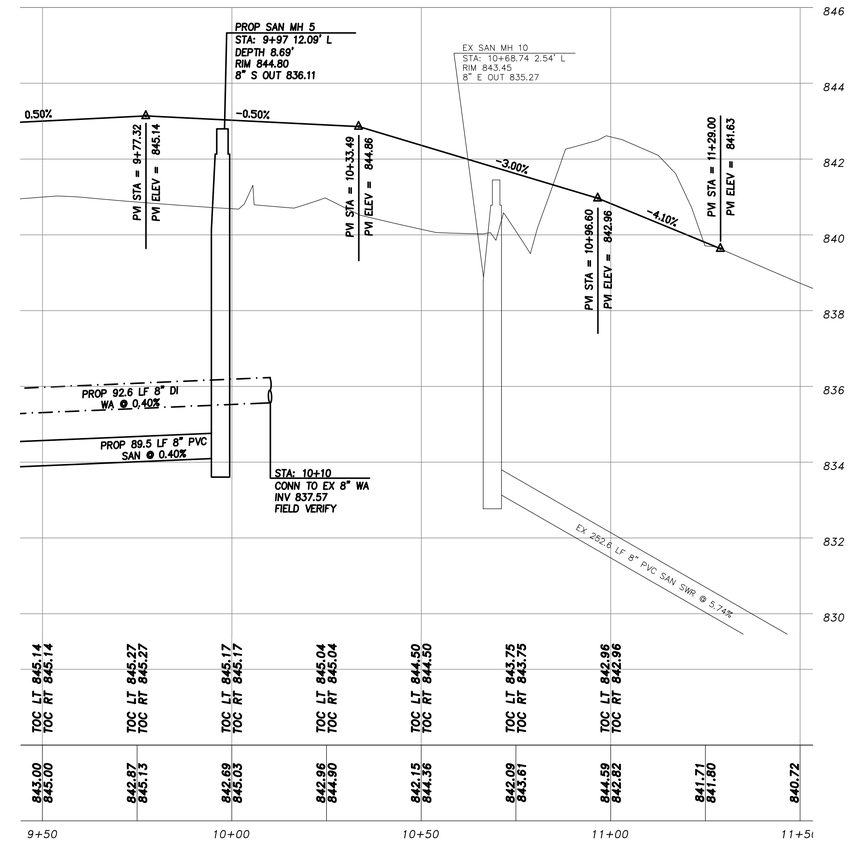

Waterloo
Find Your Path Here

KUNKEL engineering group
107 Parallel Street
Beaver Dam, WI 53916
(920)356-9447
Fax (920)356-9454

	INITIALS	DATE
1st REVISION BY:	#####	#####
2nd REVISION BY:	#####	#####
ASBUILT BY:	#####	#####

	INITIALS	DATE
DESIGNED BY:	JKB	10/2019
DRAWN BY:	JKB	10/2019
CHECKED BY:	MJL	10/2019
APPROVED BY:	JKB	11/2019

NOTE:
1. CERTAIN UTILITIES AND/OR STRUCTURES BOTH ABOVE AND BELOW GROUND HAVE BEEN LOCATED ON THE PLANS. THESE LOCATIONS SHALL NOT BE TAKEN AS CONCLUSIVE. VERIFICATION TO THE SATISFACTION OF THE CONTRACTOR OF THE EXACT LOCATION AND ELEVATION OF ALL UTILITIES AND/OR STRUCTURES, WHETHER SHOWN ON THE PLANS OR NOT, SHALL BE ASSUMED TO BE A PART OF THE CONTRACT.
2. THESE PLANS ARE INSTRUMENTS OF SERVICE PROPERTY OF KUNKEL ENGINEERING GROUP AND MAY NOT BE REPRODUCED OR USED BY ANY PERSONS, FOR ANY PURPOSE, WITHOUT FIRST CONSULTING WITH THE CITY SURVEYOR OR THE PROJECT ENGINEER OR KUNKEL ENGINEERING GROUP.

City of Waterloo, WI
2020 Street and Utility Construction
Treyburn Farms 1st Addition
Phase 3 Bluegrass Trail Extension
Sta: 6+00 to Sta: 11+50

SCALE AS SHOWN:
0 20'

ENGINEER PROJ NO:
KU19.1053.00

OWNER PROJ NO:
00-00

SHEET NUMBER:
3 of 8

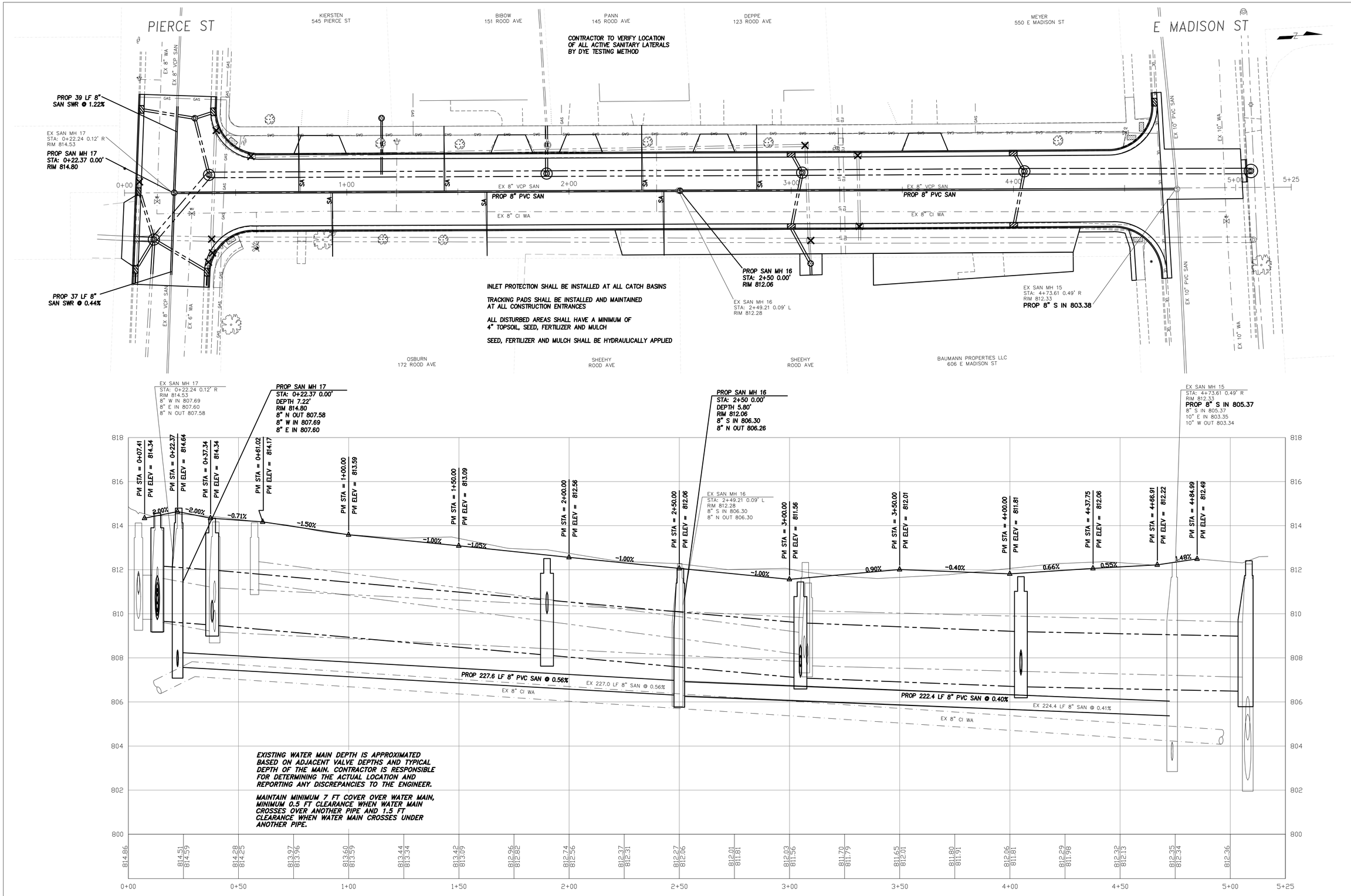

Waterloo
Find Your Path Here

KUNKEL engineering group
107 Parallel Street
Beaver Dam, WI 53916
(920)356-9447
Fax (920)356-9454

	INITIALS	DATE
1st REVISION BY:	#####	#####
2nd REVISION BY:	#####	#####
ASBUILT BY:	#####	#####

	INITIALS	DATE
DESIGNED BY:	JKB	10-2019
DRAWN BY:	JKB	10-2019
CHECKED BY:	MJL	11-2019
APPROVED BY:	JKB	11-2019

NOTE:
1. CERTAIN UTILITIES AND/OR STRUCTURES BOTH ABOVE AND BELOW GROUND HAVE BEEN LOCATED ON THE PLANS. THESE LOCATIONS SHALL NOT BE TAKEN AS CONCLUSIVE. VERIFICATION TO THE SATISFACTION OF THE CONTRACTOR OF THE EXACT LOCATION AND CONDITION OF ALL UTILITIES AND/OR STRUCTURES, WHETHER SHOWN ON THE PLANS OR NOT, SHALL BE ASSUMED TO BE A PART OF THE CONTRACT.
2. THE PLANS ARE PROVIDED TO THE CONTRACTOR FOR THE CONVENIENCE OF THE CONTRACTOR. THE CONTRACTOR IS NOT AUTHORIZED TO RELEASE BY ANY NON-CITY PERSONNEL FOR ANY PURPOSE WITHOUT FIRST CONSULTING WITH THE CITY SURVEYOR OR THE PROJECT ENGINEER OR KUNKEL ENGINEERING GROUP.

City of Waterloo, WI
2020 Street and Utility Construction
Rood Avenue Sewer Plan
East Madison Street to Pierce Streeet
Sta: 0+00 to Sta: 5+25

SCALE AS SHOWN:
0 20'

WORK ORDER NO:
KU19.1052.00

CONTRACT NUMBER:
00-00

SHEET NUMBER:
4 of 8

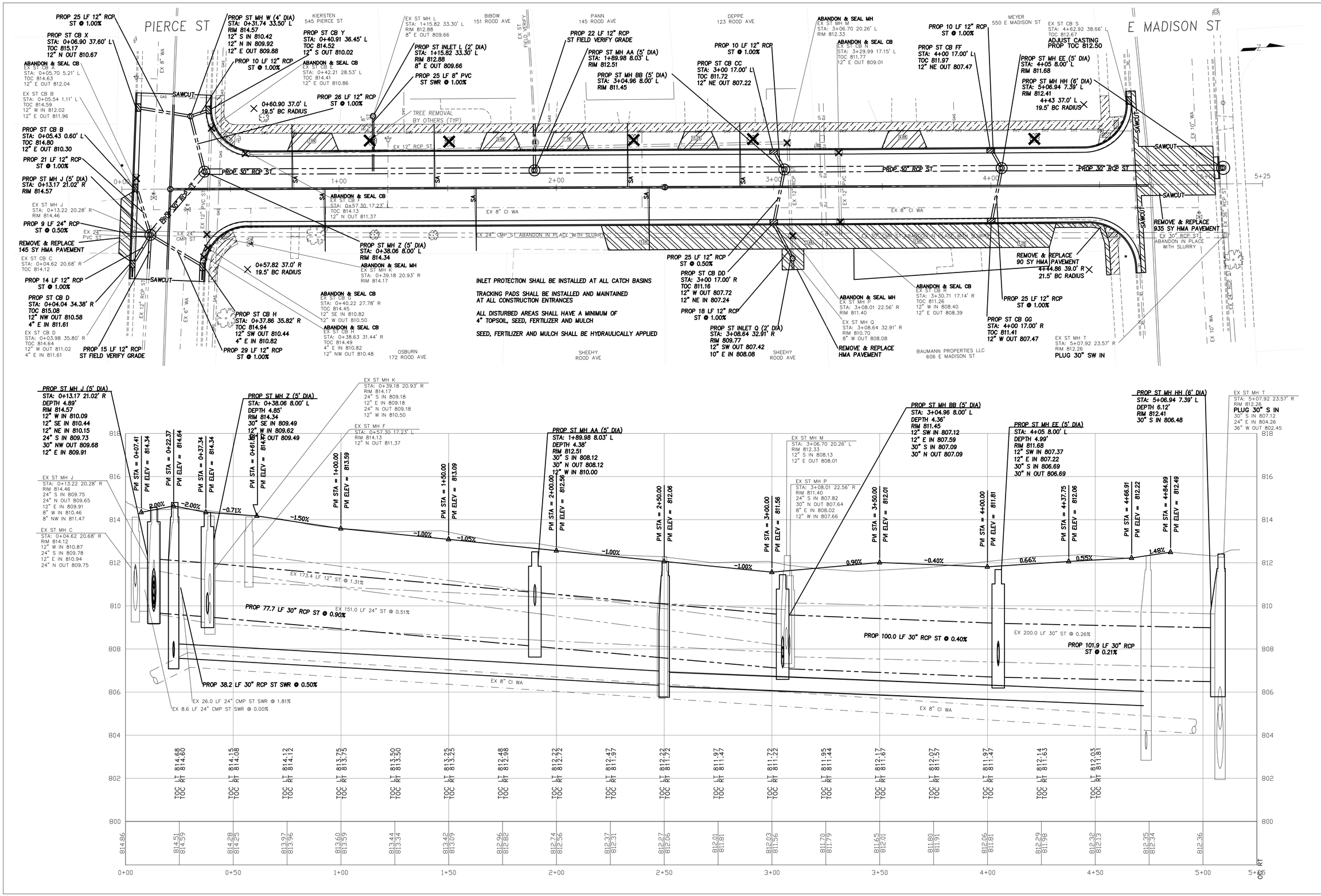

NOTE:
1. CERTAIN UTILITIES AND/OR STRUCTURES BOTH ABOVE AND BELOW GROUND HAVE BEEN LOCATED ON THE PLANS. THESE LOCATIONS SHALL NOT BE TAKEN AS CONCLUSIVE. VERIFICATION TO THE SATISFACTION OF THE CONTRACTOR OF THE EXACT LOCATION AND ELEVATION OF ALL UTILITIES AND/OR STRUCTURES, WHETHER SHOWN ON THE PLANS OR NOT, SHALL BE ASSUMED TO BE A PART OF THE CONTRACT.
2. ANY PERSONS OR ENTITIES DAMAGING UTILITIES OR STRUCTURES WITHOUT PRIOR NOTIFICATION OF THE UTILITY OWNER OR ANY PERSONS NOT AUTHORIZED TO BE ON SITE BY ANY NON-UTILITY PERSONNEL FOR ANY PURPOSE WITHOUT FIRST CONSULTING WITH THE CITY SURVEYOR OR THE PROJECT ENGINEER OR KUNKEL ENGINEERING GROUP.

Waterloo Find Your Path Here

KUNKEL engineering group
107 Parallel Street
Beaver Dam, WI 53916
(920)356-9447
Fax (920)356-9454

	INITIALS	DATE
1st REVISION BY:	#####	#####
2nd REVISION BY:	#####	#####
ASBUILT BY:	#####	#####

	INITIALS	DATE
DESIGNED BY:	JKB	10-2019
DRAWN BY:	JKB	10-2019
CHECKED BY:	MJL	10-2019
APPROVED BY:	JKB	11-2019

City of Waterloo, WI
2020 Street and Utility Construction
Rood Avenue Storm and Street Plan
East Madison Street to Pierce Streeet
Sta: 0+00 to Sta: 5+25

SCALE AS SHOWN: 0 20'

WORK ORDER NO: KU19.1052.00

CONTRACT NUMBER: 00-00

SHEET NUMBER: 5 of 8

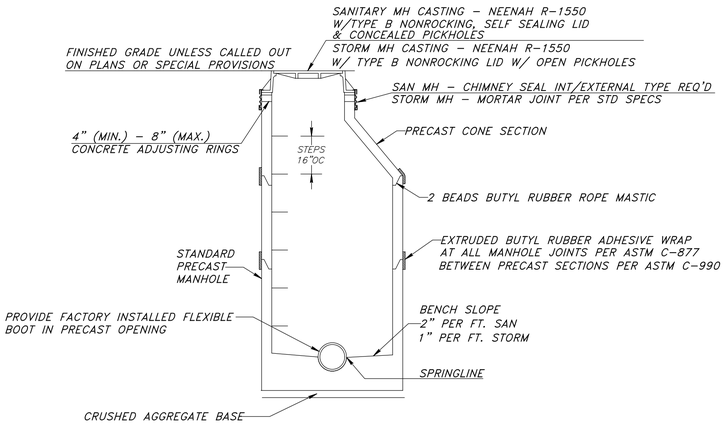

STANDARD MANHOLE DETAIL

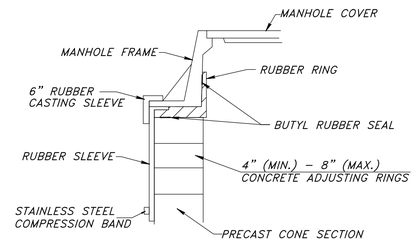

INTERNAL/EXTERNAL
FRAME/CHIMNEY SEAL

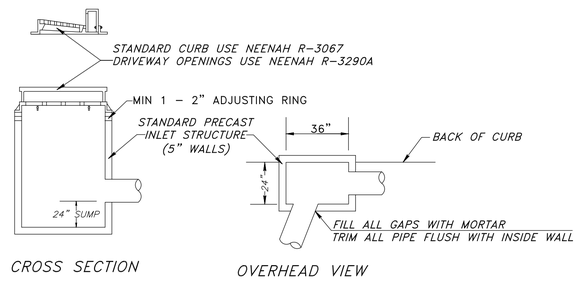

STANDARD CATCH BASIN DETAIL

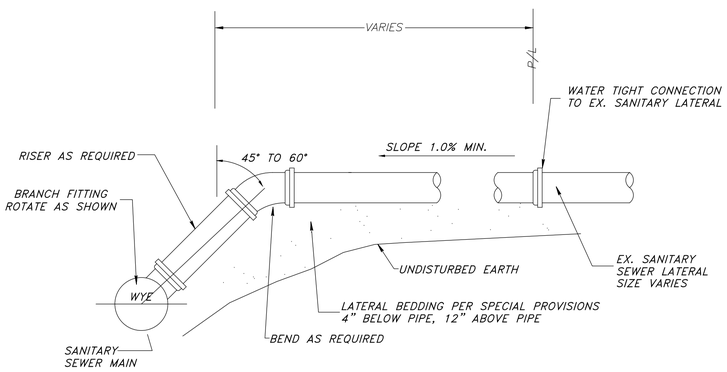

SANITARY SEWER LATERAL

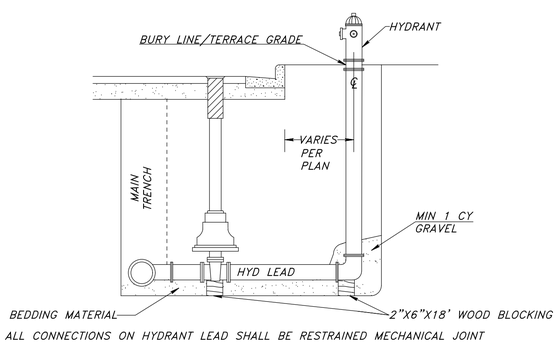

HYDRANT SETTING DETAIL
WITH AUXILIARY VALVE

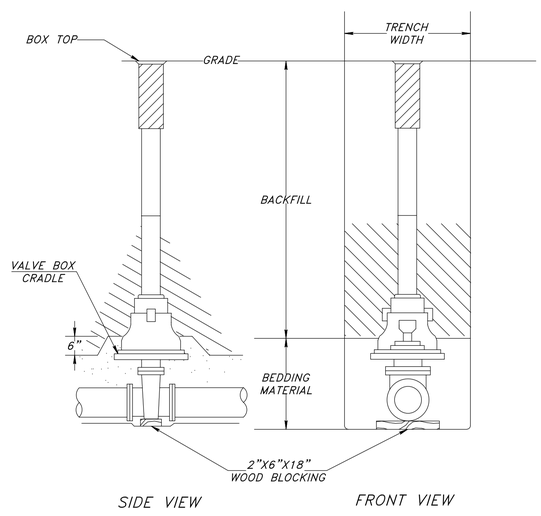

GATE VALVE & BOX SETTING DETAIL

WATER & SEWER NOTES

1) Standard Specifications:
Install all Sewer and Watermain under this contract as per the provisions of the Standard Specifications for Sewer and Water Construction in Wisconsin, Sixth Edition, and per the Project's Special Provisions.

2) Watermain:
Shall be Ductile Iron pipe, thickness class 52, conforming to A.W.W.A. C-151, cement mortar lined conforming to A.W.W.A. C-104, and polyethylene wrapped conforming to A.W.W.A. C-105 per Section 8.18.0 of the Standard Specifications. Fittings shall be mechanical joint ductile iron conforming to A.W.W.A. C-110. All watermain to be installed with external copper straps.

3) Gate Valves
Shall be Mueller Company A2370-20, conforming to A.W.W.A. C-500. Valve Box shall be Mueller Buffalo type adjustable iron valve boxes, complete with round or oval base adjustable box and lids, or approved equal.

4) Hydrants
Shall be Mueller A423 hydrants with 1-1/2" pentagon operating nut, 4-1/2" pumper nozzle, 2-1/2" hose nozzles, NFT threads, chains on caps, traffic break-flange, 16" breakaway, stainless steel bolts below grade, mechanical joint shoe, barrel for 6 -1/2 foot bury. Furnish in red color. All joints on hydrant leads shall have restrained mechanical joints.

5) Water service laterals
All water service laterals shall be 1" Type K continuous copper pipe. Corporation stops shall be Mueller H15008 for copper service pipe. Key stops shall be Mueller H15104-2 for 1 and 2-inch copper pipe, supplied with Tyler/Union type 101-F with a 2-1/2-inch shaft, complete with stationary rod and one-piece lid.

6) Sanitary Sewer & Lateral Pipe
Shall be PVC SDR-35 pipe, with rubber gasket joints conforming to Section 8.10.1 - 8.10.6(a) of the Standard W&S Specification.

7) Sanitary Sewer Manholes
Manholes shall be pre-cast concrete, conforming to section 3.5.0 of the Standard W&S Specifications and ASTM C-478. Furnish manholes of a size to accommodate the intersecting sewer per the Standard W&S Specifications, with a minimum 48" inside diameter. All pipe connections to new manholes are to be made with factory installed flexible boots. Install external rubber sleeve frame/chimney seals shall be manufactured by Cretex International or equal. Frames and lids shall be Neenah R-1550 frame, Type "B" sealed non-rocking lid with concealed pick holes.

8) Storm Sewer
Connection to existing storm structures shall be made conforming to section 3.5.7 of the Standard W&S Specifications. Connection to existing storm sewer pipe shall be made conforming to section 3.2.19 of the Standard W&S Specifications.

9) Pipe bedding
Shall be Class B as per sections 3.2.6 & 6.43 of the Wisconsin W&S Specifications. Bedding sand will not be allowed.

10) Pipe Backfill
Shall be mechanically compacted excavated material, or granular material as per Section 209 of the Standard Specifications.

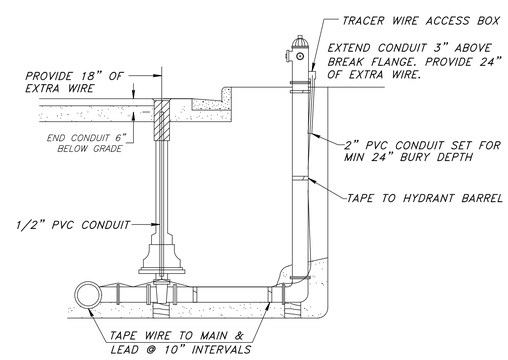

WATERMAIN TRACER WIRE DETAIL
LOCATING WIRE SHALL BE INSTALLED
AT ALL HYDRANTS AND VALVES.

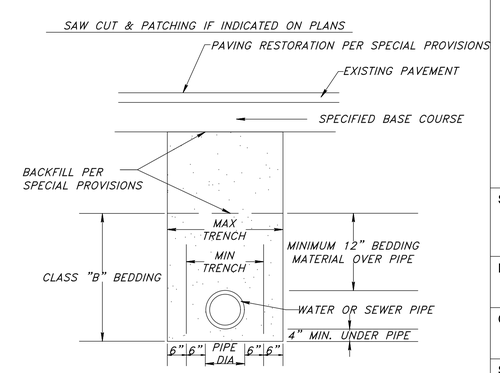

STANDARD TRENCH DETAIL

KUNKEL engineering group
107 Parallel Street
Beaver Dam, WI 53916
(920)356–9447
Fax (920)356–9454

	INITIALS	DATE
1st REVISION BY:	#####	#####
2nd REVISION BY:	#####	#####
ASBUILT BY:	#####	#####

	INITIALS	DATE
DESIGNED BY:	JKB	10-2019
DRAWN BY:	JKB	10-2019
CHECKED BY:	MJL	10-2019
APPROVED BY:	JKB	11-2019

NOTE:
1. CERTAIN UTILITIES AND/OR STRUCTURES BOTH ABOVE AND BELOW GROUND HAVE BEEN LOCATED ON THE PLANS. THESE LOCATIONS SHALL NOT BE TAKEN AS CONCLUSIVE. VERIFICATION TO THE SATISFACTION OF THE CONTRACTOR OF THE EXACT LOCATION AND CONDITION OF ALL UTILITIES AND/OR STRUCTURES, WHETHER SHOWN ON THE PLANS OR NOT, SHALL BE ASSUMED TO BE A PART OF THE CONTRACT.
2. ANY PERSON OR PERSONS, CORPORATION, PARTNERSHIP, OR ASSOCIATION WHICH MAKES USE OF THESE PLANS, OR ANY PART THEREOF, NOT INTENDED TO BE USED BY ANY OTHER PERSONNEL FOR ANY PURPOSE WITHOUT FIRST CONSULTING WITH THE CITY SURVEYOR OR THE PROJECT ENGINEER OR KUNKEL ENGINEERING GROUP.

City of Waterloo, WI
2020 Street and Utility Construction
Sewer and Water Detail Drawings

SCALE AS SHOWN:

ENGINEER PROJ NO:
KU19.1053.00
KU19.1052.00

OWNER PROJ NO:
00-00

SHEET NUMBER:
6 of 8

TWO WAY CROSSING SHOWN FOLLOW PLAN LAYOUT FOR GIVEN INTERSECTION

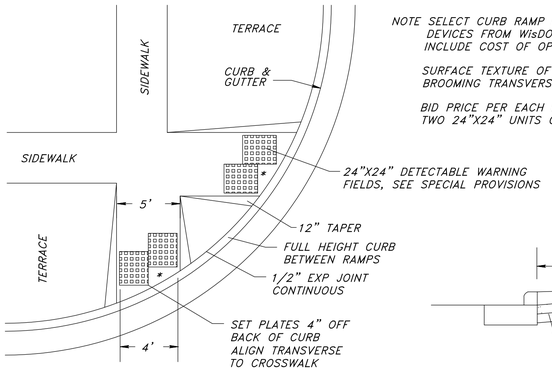

NOTE SELECT CURB RAMP DETECTABLE WARNING FIELD MATERIALS AND DEVICES FROM WisDOT APPROVED MATERIALS LIST. INCLUDE COST OF OPTIONAL COLOR IF REQUIRED BY VILLAGE.

SURFACE TEXTURE OF THE RAMP SHALL BE OBTAINED BY COARSE BROOMING TRANSVERSE TO THE SLOPE OF THE RAMP.

BID PRICE PER EACH FOR DETECTABLE WARNING FIELDS INCLUDES TWO 24"X24" UNITS OR 8 SQUARE FEET OF FIELD PER EACH

TYPE 2 RAMP

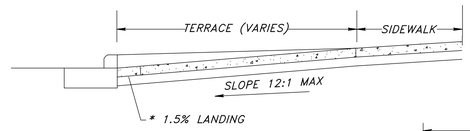

SECTION VIEW

SIDEWALK RAMP DETAILS

REQUIRED AT ALL INTERSECTIONS AND WHERE CALLED OUT ON PLANS
NOT TO SCALE

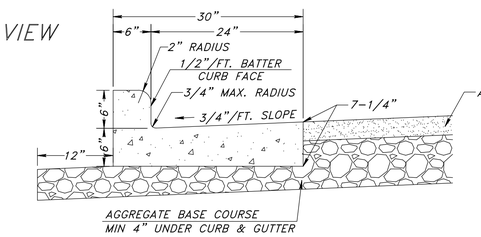

STANDARD TYPE D CURB AND GUTTER ADJACENT TO ASPHALT PAVEMENT

NOT TO SCALE

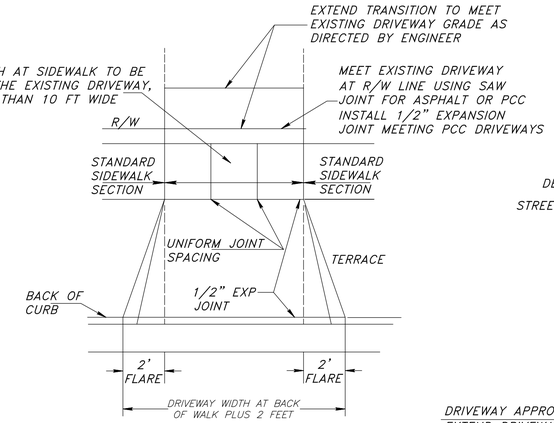

REDUCE WIDTH OF FLARE FOR NARROW TERRACE AS DIRECTED BY ENGINEER

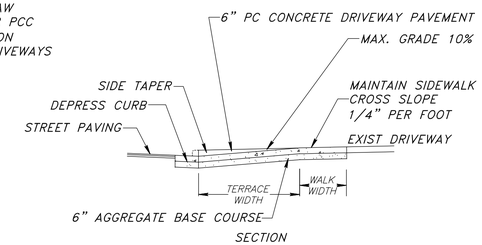

DRIVEWAY APPROACH EXTENSION AND GRADE TRANSITION NOTES:
EXTEND DRIVEWAY APPROACHES BEYOND P/L WHERE INDICATED ON PLANS OR AS DIRECTED BY THE ENGINEER TO TRANSITION TO THE GRADE OF THE EXISTING DRIVEWAY
APPROACH EXTENSIONS BEYOND THE BACK OF WALK WILL REPLACE THE EXISTING CONCRETE, ASPHALT OR GRAVEL SURFACE IN KIND WITH THE FOLLOWING MINIMUM THICKNESS
PC CONCRETE: 6" PCC DRIVEWAY PAVEMENT ON 6" AGGREGATE BASE
ASPHALT: 2" ASPHALT SURFACE COURSE ON 9" AGGREGATE BASE
GRAVEL: 9" AGGREGATE BASE COURSE

DRIVEWAY PAVEMENT DETAILS

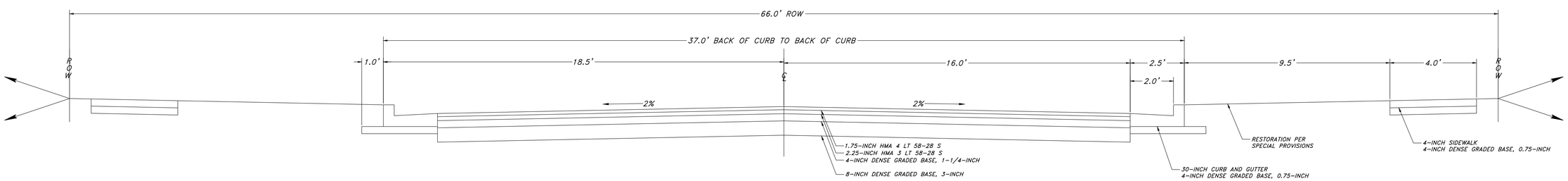

BLUEGRASS TRAIL
TYPICAL CROSS-SECTION
2% CROWN

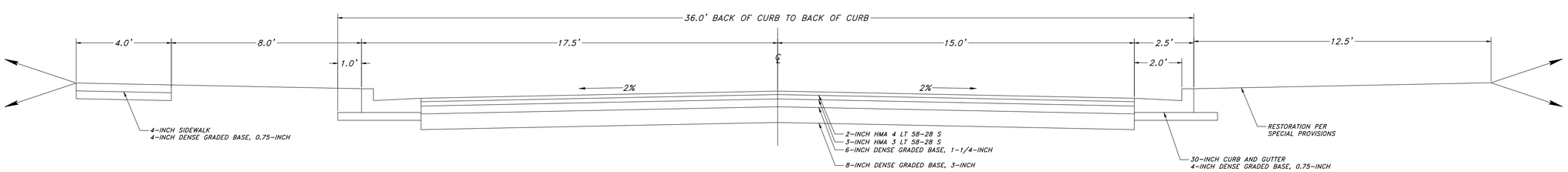

ROOD AVENUE
TYPICAL CROSS-SECTION
2% CROWN

KUNKEL engineering group
107 Parallel Street
Beaver Dam, WI 53916
(920)356-9447
Fax (920)356-9454

	INITIALS	DATE
DESIGNED BY:	JKB	10-2019
DRAWN BY:	JKB	10-2019
CHECKED BY:	MJL	10-2019
APPROVED BY:	MJL	11-2019

	INITIALS	DATE
1st REVISION BY:	####	####18
2nd REVISION BY:	#####	#####
ASBUILT BY:	#####	#####

NOTE:
1. CERTAIN UTILITIES AND/OR STRUCTURES BOTH ABOVE AND BELOW GROUND HAVE BEEN LOCATED ON THE PLANS. THESE LOCATIONS SHALL NOT BE TAKEN AS CONCLUSIVE. VERIFICATION TO THE SATISFACTION OF THE CONTRACTOR OF THE EXACT LOCATION AND CONDITION OF ALL UTILITIES AND/OR STRUCTURES, WHETHER SHOWN ON THE PLANS OR NOT, SHALL BE ASSUMED TO BE A PART OF THE CONTRACT.
2. THESE PLANS ARE THE PROPERTY OF KUNKEL ENGINEERING GROUP. THEY ARE TO BE USED FOR THIS PROJECT ONLY AND SHALL NOT BE LOANED OR ANY PORTION THEREOF BY ANY NON-CITY PERSONNEL FOR ANY PURPOSE WITHOUT FIRST CONSULTING WITH THE CITY SURVEYOR OR THE PROJECT ENGINEER OR KUNKEL ENGINEERING GROUP.

City of Waterloo, WI
2020 Street and Utility Construction
Sewer and Water Detail Drawings

SCALE AS SHOWN:

ENGINEER PROJ NO:
KU19.1053.00
KU19.1052.00

OWNER PROJ NO:
00-00

SHEET NUMBER:

STANDARD EROSION CONTROL PROVISIONS

General Notes for Construction Erosion Control:

1. Refer to WDNR's Stormwater web page of technical standards @ http://dnr.wi.gov/org/water/wm/nps/stormwater/techstds.htm#Construction

2. Construct and maintain all erosion and sediment control measures in accordance with the WDNR's Stormwater web page of technical standards @ http://dnr.wi.gov/org/water/wm/nps/stormwater/techstds.htm#Construction

3. Install sediment control measures prior to any grading or disturbance of existing surface material. Adjust all sediment control measures to meet field conditions at the time of construction.

4. Provide weekly inspection and maintenance of all sediment control structures to ensure intended purpose is accomplished. Maintain documentation of inspections per the project special provisions, Sediment control measures are to be in working condition at the end of each working day.

5. In addition to weekly inspections,inspect sediment control structures for integrity after any rainfall of 1/2" or greater and correct any damaged structures.

6. Do not remove sediment control measures until the areas served have established vegetative cover.

7. Collect tracked soil from paved roads located near the construction site. All streets shall be swept and cleared of all dirt and debris on a daily basis.

8. When Discharging trench water refer to WDNR Technical Standard 1061 for de-watering in order to properly filter water in a settling basin or filtering device prior to release into a into a storm sewer or stream.

9. Protect storm sewer section basins from run-off with fabric per WDNR Tech Std 1060.

10. Prevent overland flow from leaving the work site by installing straw bale or fabric filter fencing parallel to the contours located downhill from the work area.

11. Sediment control for pipeline construction.
 a. Place excavated trench material on the high side of the trench.
 b. Backfill, compact, and stabilize the trench immediately after pipe installation.

12. Temporary seeding areas which land-disturbing activities will not be performed for a period greater than 30 days and requires vegetative cover for less than one year. Permanent seeding and stabilization should be applied within a week of final grade being established.

13. All land disturbance and stabilization for this project will occur between April 15th and September 15th. Warm season seeding can be used during this time period. Should seeding need to be completed after November 15th, a dormant seed must be used. All seeding constriction shall conform to WDNR Conservation Practice Standard 1059.

PROJECT SPECIFIC EROSION CONTROL PLAN
City of Waterloo – 2020 STREET AND UTILITY CONSTRUCTION

Bluegrass Trail:

A tracking pad must be installed per erosion control plan details on each site prior to construction, and maintained through final stabilization.

Inlet protection must be installed on all existing inlets per the Erosion Control Plan and Details Prior to Construction. Inlet protection shall be installed on all new inlets as they are installed. The locations of existing inlets needing inlet protection are shown on plan pages 2–5.

Conform To Applicable WDNR Technical Standards

1052 Non Channel Erosion Mat
1057 Stone Tracking Pad
1058 Mulching
1059 Seeding
1060 Inlet Protection
1061 De–Watering
1067 Grading Practices for Erosion Control
1068 Dust Control

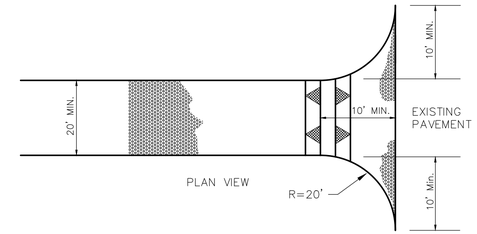

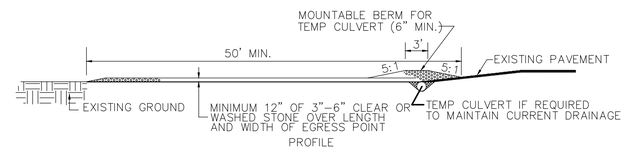

1) LOCATION – A TRACKING PAD SHALL BE LOCATED AT EVERY POINT WHERE CONSTRUCTION TRAFFIC ENTERS OR LEAVES A CONSTRUCTION SITE. VEHICLES LEAVING THE SITE MUST TRAVEL OVER THE ENTIRE LENGTH OF THE STABILIZED CONSTRUCTION ENTRANCE.

2) SURFACE WATER – ALL SURFACE WATER FLOWING TO OR DIVERTED TOWARD CONSTRUCTION ENTRANCES SHALL BE PIPED THROUGH THE ENTRANCE. MAINTAINING POSITIVE DRAINAGE. PIPE INSTALLED THROUGH THE STABILIZED CONSTRUCTION ENTRANCE SHALL BE PROTECTED WITH A MOUNTABLE BERM WITH 5:1 SLOPES AND MINIMUM OF 6" OF STONE OVER THE PIPE. TO BE SIZED ACCORDING TO THE DRAINAGE.8" MINIMUM WILL BE REQUIRED.

3) MAINTENANCE – TRACKING PAD SHALL BE INSPECTED DAILY AND REPAIRED OR REPLACED IMMEDIATELY.

4) REMOVAL – SITE STABILIZED/SEEDED/PAVED AS PER SPECIAL PROVISIONS.

TRACKING PAD / STABILIZED CONSTRUCTION ENTRANCE

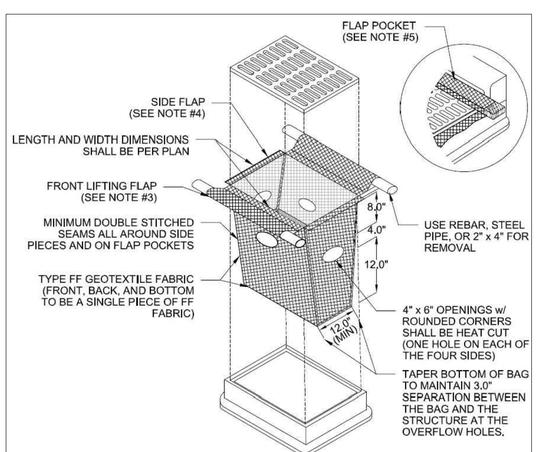

INLET PROTECTION TYPE D

CAN BE INSTALLED IN INLETS WITH OR WITHOUT CURB BOXES

Required Storm Sewer

Inlet Protection Type D

Inlet Protection Type D shall be installed in accordance with WDNR Technical Standards 1060. Inlet protection is to be installed on all existing and installed inlets in the project limits as shown on the paving plans or as directed by owner/engineer. Inlet protection for new or replacement inlets is to be installed as they are installed.

Notes:

1. *Taper bottom of bag to maintain three inches of clearance between bag and structure, measured from the bottom of the overflow openings to the structure wall.*
2. *Geotextile fabric type FF for flaps, top and bottom of outside of filter bag.*
3. *Front lifting flap is to be used when removing and maintaining filter bag*
4. *Side flaps shall be a maximum of two inches long, fold the fabric over and reinforce with multiple stitches.*
5. *Flap pockets shall be large enough to accept 2"x4". The rebar, steel pipe, or wood shall be installed in the rear flap and shall not block the top half of the curb face opening.*

Maintenance Notes:

1. *When removing or maintaining inlet protection, care shall be taken so that the sediment trapped in the fabric does not fall into the structure. Material that has fallen into the inlet shall be immediately removed.*

KUNKEL engineering group
107 Parallel Street
Beaver Dam, WI 53916
(920)356-9447
Fax (920)356-9454

	INITIALS	DATE
1st REVISION BY:	####	####
2nd REVISION BY:	####	####
ASBUILT BY:	####	####

	INITIALS	DATE
DESIGNED BY:	JKB	10-2019
DRAWN BY:	JKB	10-2019
CHECKED BY:	MJL	10-2019
APPROVED BY:	JKB	11-2019

NOTE:
1. CERTAIN UTILITIES AND/OR STRUCTURES BOTH ABOVE AND BELOW GROUND HAVE BEEN LOCATED ON THE PLANS. THESE LOCATIONS SHALL NOT BE TAKEN AS CONCLUSIVE. VERIFICATION TO THE SATISFACTION OF THE CONTRACTOR OF THE EXACT LOCATION AND CONDITION OF ALL UTILITIES AND/OR STRUCTURES, WHETHER SHOWN ON THE PLANS OR NOT, SHALL BE ASSUMED TO BE A PART OF THE CONTRACT.
2. ANY PERSONS MAKING USE OF THIS PROPERTY, INCLUDING BUT NOT LIMITED TO CONTRACTORS, SUBCONTRACTORS, AND ANY OTHER PERSONNEL, FOR ANY PURPOSE WITHOUT FIRST CONSULTING WITH THE CITY SURVEYOR OR THE PROJECT ENGINEER OR KUNKEL ENGINEERING GROUP.

City of Waterloo, WI
2020 Street and Utility Construction
Sewer and Water Detail Drawings

SCALE AS SHOWN:

ENGINEER PROJ NO:
KU19.1053.00
KU19.1052.00

OWNER PROJ NO:
00-00

SHEET NUMBER:
8 of 8